December 2019

ONLY FOR OKUMA

VELOCITY SU-matic®

LU7000M

www.velocityproducts.com

VELOCITY
VELOCITYPRODUCTS.COM

THINC PARTNERS

A Complete Lineup of In-Stock Lathe Tooling for Okuma • Three Year Warranty

VELOCITY TOOLING FOR OKUMA LU7000M

VELOCITY SU-matic®

Velocity Tooling: *Only for Okuma*

Velocity Products has the largest inventory of lathe tooling for **Okuma** in North America. Velocity is the OEM supplier of tooling startup kits for **Okuma** lathes. Velocity tooling is designed and manufactured by SU-matic – a worldwide leader in tooling technology headquartered in Switzerland. SU-matic has several **Okuma** machine tools in their manufacturing facility. SU-matic works closely with engineers from **Okuma America**, **Okuma Japan**, and **Okuma Europe** when designing tools. This engineering collaboration ensures flawless tooling performance on **Okuma** lathes, multitasking machines, and machining centers. Velocity/SU-matic tooling is available ***Only for Okuma*** machine tools.

Velocity Tooling Technology

Velocity tools are delivered ready to use; all live tools are run-in at the factory and internal coolant tools are pressure tested as a final quality check prior to shipment. Velocity tools are greased for life; no customer maintenance is required. Velocity/SU-matic tools are CMM inspected and serialized records are kept on file.

Three Year Warranty

Velocity/SU-matic Tooling is designed to give years of service under the most demanding applications. The build quality of our tool holders allows us to back them with an ***UNMATCHED Three Year Factory Warranty.***

THINC PARTNERS

VELOCITY SU-matic®
VELOCITYPRODUCTS.COM

www.velocityproducts.com • 256-258-5549 • FAX: 256-461-8164 • sales@velocityproducts.com

VELOCITY TOOLING FOR OKUMA LU7000M

VELOCITY SU-matic®

Contents

VELOCITY TOOLING MATRIX • ORDER FORM	3
TOOLING KITS	5
CROSS (RADIAL) TOOLS	6
FACE (AXIAL) TOOLS	6
OD-I HOLDERS	7
BORING BAR HOLDERS	8
SU-MATIC CAPTO LIVE TOOLS	9
SU-MATIC CAPTO STATIC TOOLS	10

THINC PARTNERS

VELOCITY SU-matic®
VELOCITYPRODUCTS.COM

VELOCITY TOOLING FOR OKUMA LU7000M

Tool Matrix

Company _____

Contact _____

Address _____

City, State, Zip _____

E-mail _____

Phone/Fax # _____

Dealer Location _____

Tool Description
LU7000M

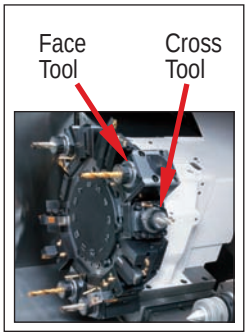

Turret Plugs

Machine Model	Part #	Quantity
LU7000M	14.430.0.0157.0	

Live Tools

Tool Type		Tool #	Quantity	Page	Coolant (PSI)	Output	Ratio (In:Out)	Torque (Nm)	Maximum RPM
Cross		14.101.0.0279.0		6	External	ER-50	1:1	200	3,500
		14.101.0.0277.0		6	IC (1,000)	ERC-50	1:1	200	3,500
Face		14.800.0.0395.0		6	External	ER-50	1:1	200	3,500
		14.800.0.0393.0		6	IC (1,450)	ERC-50	1:1	200	3,500

OD-I & OD-II Holders

Holder Type		Holder Style	Tool #	Quantity	Page	Stick Size (Inches)	Reversable (main/sub)	Coolant
OD-I		OD-I Small	14.910.0.0518.0		7	1.5	Yes	External
		OD-I Large	14.910.0.0520.0		7	1.5	Yes	External

Tool Matrix

Boring Bar Holder

Holder Type		Holder Style	Tool #	Quantity	Page	Bar Size (Inches)	Reversable (main/sub)	Coolant
Boring Bars		Full Depth	14.910.0.0349.0		8	2.5	-	IC & EXT
		Split	14.910.0.0522.0		8	2.5	-	IC & EXT

SU-matic Capto® Live Tools

Tool Type		Tool #	Quantity	Page	Coolant (PSI)	Output	Ratio (In:Out)	Torque (Nm)	Maximum RPM
Cross		14.101.0.0288.0		9	IC (1,015)	C5	1:1	200	3,500
Face	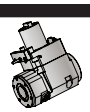	14.800.0.0399.0		9	IC (1,450)	C5	1:1	200	3,500

SU-matic Capto® Static Tools

Holder Type		Holder Style	Tool #	Quantity	Page	Output	Reversable (main/sub)	Coolant
C6 OD-I		OD-I	14.910.0.0379.0		10	C6	Yes	IC & EXT
C6 Boring Bar		Offset	14.910.0.0380.0		10	C6	Yes	IC & EXT

VELOCITY TOOLING FOR OKUMA LU7000M

LU7000M Kits

OKUMA

LU7000M V12 Upper Turret (Live & Static Tools) , V10 Lower Turret (Static Tools Only)

LU7000M V12 Upper Turret

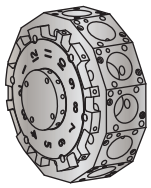

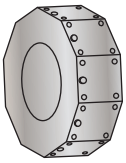

LU7000M V10 Lower Turret (static tools only)

Description		Static Kit • M Turret	Live Tooling Kits	
Tool Type Tool Size Velocity #	Turret / Type	M	External Coolant	Internal Coolant
	Part # OAC	KUP-1225-00	KUP-0154-00	KUP-0155-00
	Part # Velocity	14.430.0.0228.0	14.430.0.0162.0	14.430.0.0163.0
OD-I Large 1.5" 14.910.0.0520.0		2		
OD-I Small 1.5" 14.910.0.0518.0		4		
ID 2.5" 14.910.0.0349.0		8		
Turret Plug 14.430.0.0157.0		4		
Cross Tool ER-50 14.101.0.0279.0			2	
Face Tool ER-50 14.800.0.0395.0			2	
Cross Tool (IC) ERC-50 14.101.0.0277.0				2
Face Tool (IC) ERC-50 14.800.0.0393.0				2

VELOCITY TOOLING FOR OKUMA LU7000M

Live Tools

LU7000M Cross Tools • ER-50 Output

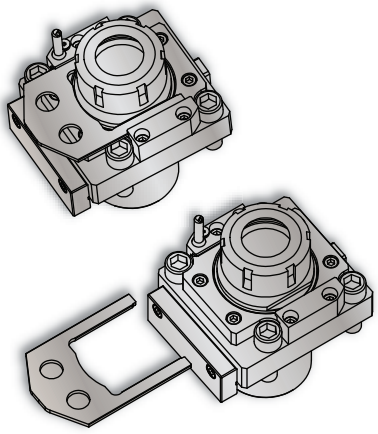

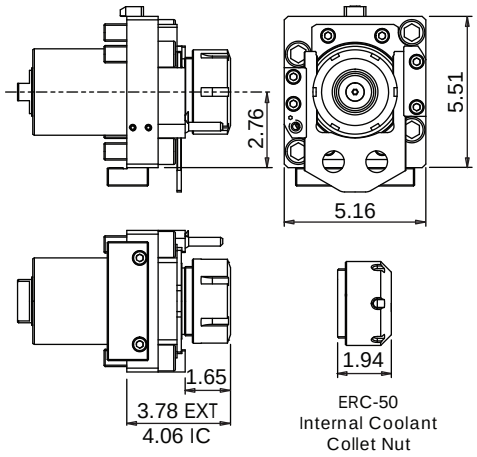

Notes

Wrenches Included with Tools

Maximum Drill Ø		Maximum Mill Ø	
EXT	1 3/8"	EXT	1 3/16"
IC	1 3/8"	IC	1 3/16"
Turret Plugs		14.430.0.0157.0	

* 1,000 psi internal coolant (IC) cross tool CANNOT be run without coolant.

All coolant thru live tools require 30 **micron coolant filtration nominal, 50 micron coolant filtration absolute.**

Tool #	Coolant	Output	Rotation (In:Out)	Ratio (In:Out)	Max. RPM	Torque	Spindle Wrench	Collet Wrench
14.101.0.0279.0	EXT	ER-50	CW:CW	1:1	3,500	200 Nm	1005101050	7111.50000
14.101.0.0277.0	IC & EXT* 1,000 psi	ERC-50	CW:CW	1:1	3,500	200 Nm	1005101050	7111.50000

LU7000M Face Tools • ER-50 Output

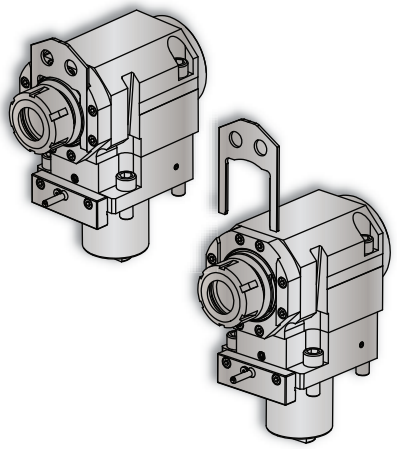

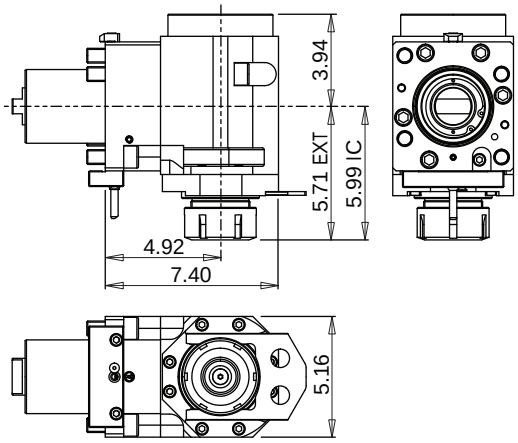

Notes

Wrenches Included with Tools

Maximum Drill Ø		Maximum Mill Ø	
EXT	1 3/8"	EXT	1 3/16"
IC	1 3/8"	IC	1 3/16"
Turret Plugs		14.430.0.0157.0	

* 1,450 psi internal coolant (IC) face tool **CAN** be run without coolant; the coolant sealing mechanism can be completely dis-engaged.

All coolant thru live tools require 30 **micron coolant filtration nominal, 50 micron coolant filtration absolute.**

Tool #	Coolant	Output	Rotation (In:Out)	Ratio (In:Out)	Max. RPM	Torque	Spindle Wrench	Collet Wrench
14.800.0.0395.0	EXT	ER-50	CW:CW	1:1	3,500	200 Nm	1005101050	7111.50000
14.800.0.0393.0	IC & EXT* 1,450 psi	ERC-50	CW:CW	1:1	3,500	200 Nm	1005101050	7111.50000

Static Tools

OKUMA

LU7000M OD-I Holder • Small

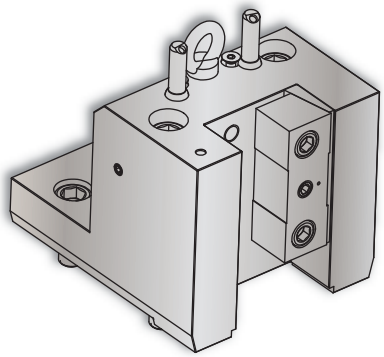

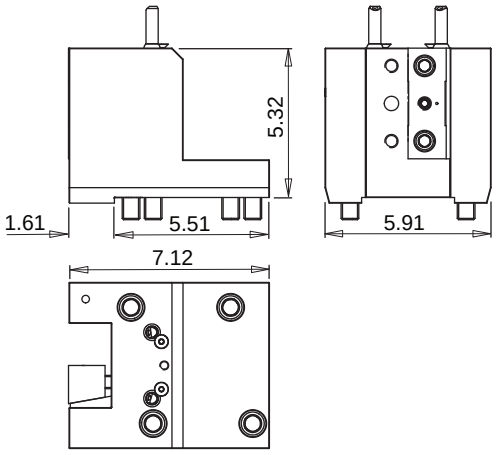

Notes

3D Models (.stp) and CAS (.stl) files are available for all *VELOCITY/SU-matic* tool holders. Please contact Velocity: sales@velocityproducts.com.

Turret Plugs	14.430.0.0157.0

VELOCITY/SU-matic tooling for OKUMA is manufactured on OKUMA machine tools.

VELOCITY has the most complete inventory of tooling for OKUMA machine tools in North America.

Lathe Model	Tool #	Reversible (Main/Sub)	Stick Size	Depth	Height	Width
LU7000M	14.910.0.0518.0	Yes	1.5"	7.12"	5.32"	5.91"

LU7000M OD-I Holder • Large

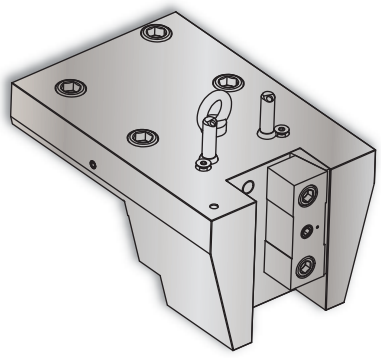

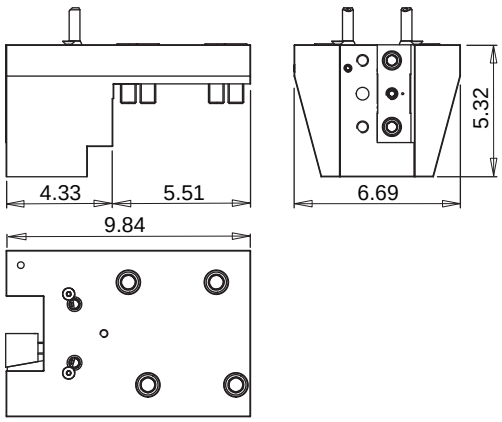

Notes

3D Models (.stp) and CAS (.stl) files are available for all *VELOCITY/SU-matic* tool holders. Please contact Velocity: sales@velocityproducts.com.

Turret Plugs	14.430.0.0157.0

VELOCITY/SU-matic tooling for OKUMA is manufactured on OKUMA machine tools.

VELOCITY has the most complete inventory of tooling for OKUMA machine tools in North America.

Lathe Model	Tool #	Reversible (Main/Sub)	Stick Size	Depth	Height	Width
LU7000M	14.910.0.0520.0	Yes	1.5"	9.84"	5.32"	6.69"

VELOCITY TOOLING FOR OKUMA LU7000M

Static Tools

LU7000M Boring Bar Holder

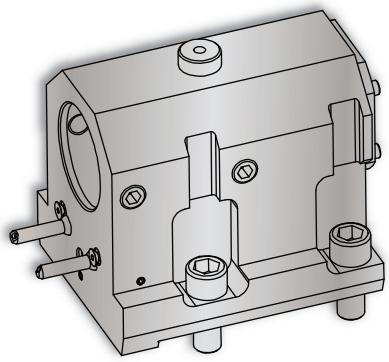

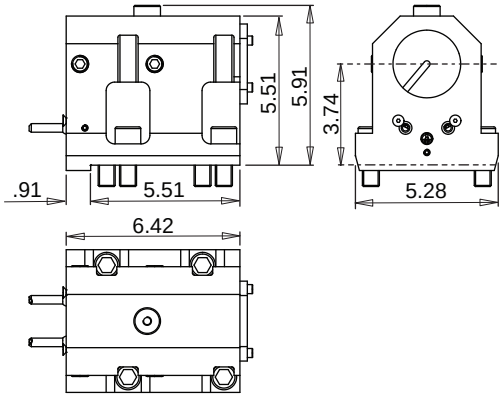

Notes

VELOCITY/SU-matic ID holders can be used with both internal and external coolant. Internal Coolant Plates are included with all *VELOCITY/SU-matic* multitasking turret ID holders.

Turret Plugs	14.430.0.0157.0

VELOCITY/SU-matic tooling for OKUMA is manufactured on OKUMA machine tools.

Coolant filtration is recommended when using ID holders with internal coolant plates.

Lathe Model	Tool #	Reversible (Main/Sub)	Coolant	ID	Height	Depth
LU7000M	14.910.0.0349.0	-	IC/EXT	2.5"	5.51"	6.42"

LU7000M Split Boring Bar Holder

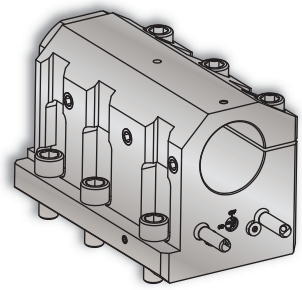

For use on LU7000 M V10 "Wide Turret" Only.

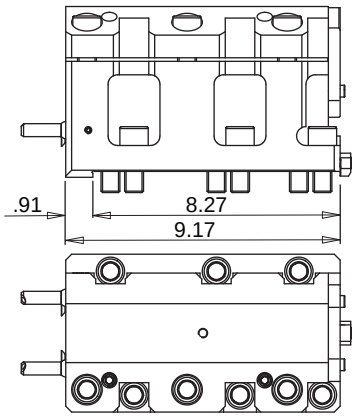

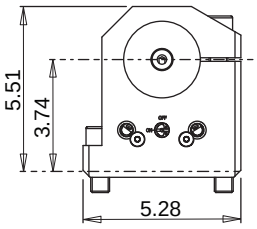

Boring bar must be adapted for Internal Coolant use.

Notes

VELOCITY/SU-matic ID holders can be used with both internal and external coolant. Internal Coolant Plates are included with all *VELOCITY/SU-matic* multitasking turret ID holders.

Turret Plugs	14.430.0.0157.0

VELOCITY/SU-matic tooling for OKUMA is manufactured on OKUMA machine tools.

Coolant filtration is recommended when using ID holders with internal coolant plates.

Lathe Model	Tool #	Reversible (Main/Sub)	Coolant	ID	Height	Depth
LU7000M V10 Wide Turret Only	14.910.0.0522.0	-	IC/EXT	2.5"	5.51"	9.17"

VELOCITY TOOLING FOR OKUMA LU7000M

SU-matic Capto® Tools

OKUMA

LU7000M C5 Cross Tool

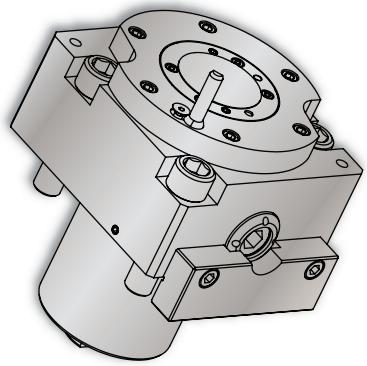

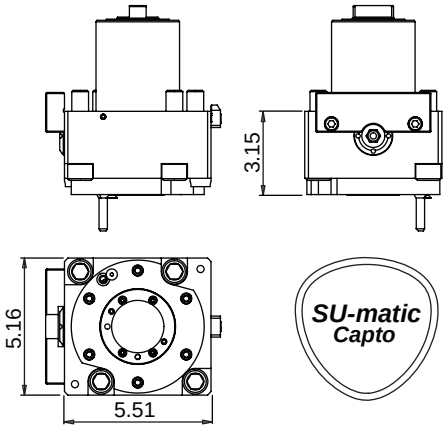

Notes

REGO-FIX® C5 Collet Chucks

ER Output	Rego-Fix Part #
ER-16	4805.11630
ER-20	4805.12010
ER-25	4805.12510
ER-32	4805.13210
Turret Plugs	14.430.0.0157.0

* 1,000 psi internal coolant (IC) cross tool CANNOT be run without coolant.

All coolant thru live tools require 30 **micron coolant filtration nominal, 50 micron coolant filtration absolute.**

Tool #	Coolant	Output	Rotation (In:Out)	Ratio (In:Out)	Max. RPM	Torque	Hex Wrench	C5 Collet Chucks
14.101.0.0288.0	IC & EXT* 1,000 psi	C5	CW:CW	1:1	3,500	200 Nm	12 mm	See Above

LU7000M C5 Face Tool

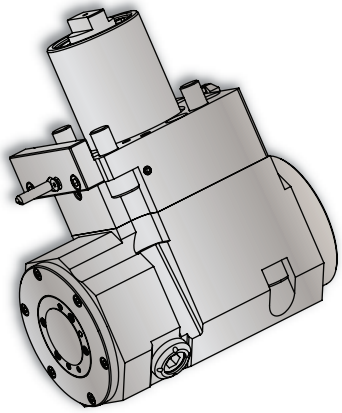

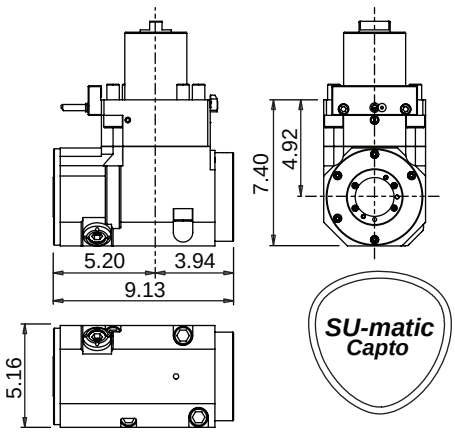

Notes

REGO-FIX® C5 Collet Chucks

ER Output	Rego-Fix Part #
ER-16	4805.11630
ER-20	4805.12010
ER-25	4805.12510
ER-32	4805.13210
Turret Plugs	14.430.0.0157.0

* 1,450 psi internal coolant (IC) face tool **CAN** be run without coolant; the coolant sealing mechanism can be completely dis-engaged.

All coolant thru live tools require 30 **micron coolant filtration nominal, 50 micron coolant filtration absolute.**

Tool #	Coolant	Output	Rotation (In:Out)	Ratio (In:Out)	Max. RPM	Torque	Hex Wrench	C5 Collet Chucks
14.800.0.0399.0	IC & EXT* 1,450 psi	C5	CW:CW	1:1	3,500	200 Nm	12 mm	See Above

VELOCITY TOOLING FOR OKUMA LU7000M

SU-matic Capto® Tools

OKUMA

LU7000M C6 OD-I Holder

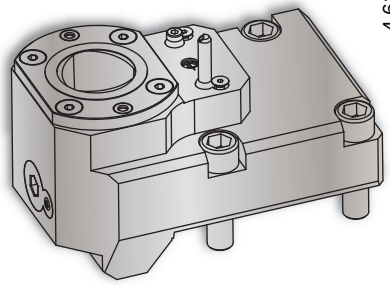

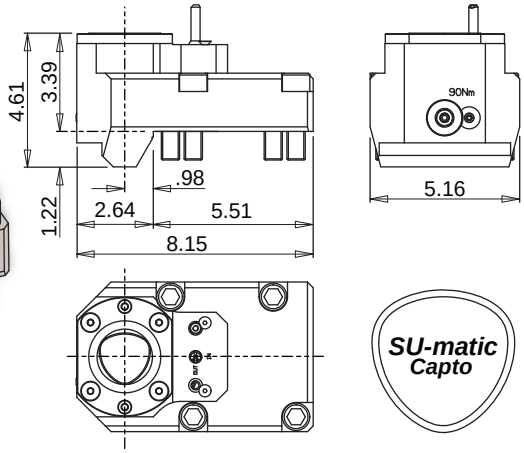

Notes
REGO-FIX® C6 Collet Chucks

ER Output	Rego-Fix Part #
ER-20	2806.12020
ER-25	2806.12520
ER-32	2806.13220
ER-40	2806.14020
Turret Plugs	14.430.0.0157.0

VELOCITY/SU-matic tooling for OKUMA is manufactured on OKUMA machine tools.

SU-matic Capto® static tools are coolant thru. Coolant filtration is recommended.

Lathe Model	Tool #	Reversible (Main/Sub)	Coolant	Output	Hex Wrench	C6 Collet Chucks
LU7000M	14.910.0.0379.0	No	IC/EXT	C6	12 mm	See Above

LU7000M C6 ID Holder

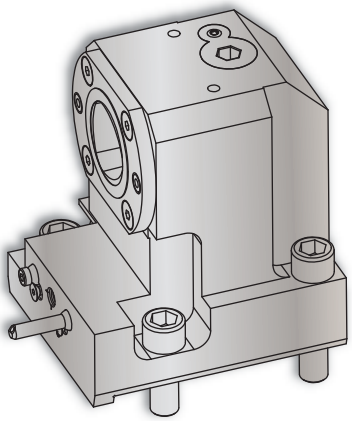

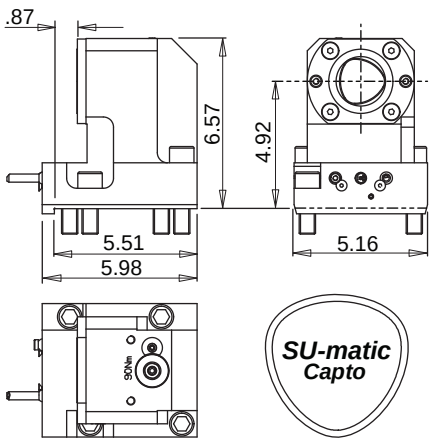

Notes
REGO-FIX® C6 Collet Chucks

ER Output	Rego-Fix Part #
ER-20	2806.12020
ER-25	2806.12520
ER-32	2806.13220
ER-40	2806.14020
Turret Plugs	14.430.0.0157.0

VELOCITY/SU-matic tooling for OKUMA is manufactured on OKUMA machine tools.

SU-matic Capto® static tools are coolant thru. Coolant filtration is recommended.

Lathe Model	Tool #	Reversible (Main/Sub)	Coolant	Output	Hex Wrench	C6 Collet Chucks
LU7000M	14.910.0.0380.0	Yes	IC/EXT	C6	12 mm	See Above

ONLY FOR OKUMA

VELOCITY SU-matic®

LU7000M

www.velocityproducts.com

VELOCITY
VELOCITYPRODUCTS.COM

THINC PARTNERS

A Complete Lineup of In-Stock Lathe Tooling for Okuma • Three Year Warranty*

Velocity Products • 350 Electronics Boulevard, Huntsville, AL 35824 • 256-258-5549
www.velocityproducts.com • sales@velocityproducts.com

** Warranty voided if internal coolant tools are used without coolant and coolant filtration. Exceeding specified maximum cutting tool sizes voids warranty.*

© Velocity Products • Specifications subject to change without notice • Velocity-Okuma LU7000M 2.2019.1